Proper PCV Valve Selection for a High Performance Engine Build

BY **MATT WAGNER** AND **GENE WAGNER**

It isn't uncommon to see 50 or more PCV valves on the shelf of any auto parts store. Each one has unique flow characteristics and vacuum transition points, and is designed to work with the vacuum and blowby requirements of a certain group of engines. Knowing which valve to pick for a modified engine build is difficult to impossible, and usually involves a lot of guess work. Making matters worse, PCV valve manufacturers and OEMs are reluctant to share any PCV flow data. Without this information, the consumer's only option is to purely guess at which valves have which flow characteristics.

To further complicate matters, performance engine builds very seldom retain all stock components. So even if your vehicle's PCV valve has a listing in the parts book, if the cam, heads, intake or any other modifications have been made the factory PCV recommendation will likely no longer be valid. These modifications not only can change the amount of blowby the engine produces, but more importantly they often significantly change the vacuum profile of the engine.

We were faced with the dilemma of which PCV valve to select after assembling a highly modified small block Ford. When idle tuning issues arose after startup, we knew our randomly selected PCV valve did not work. Thus our quest for a solution began.

Before we outline our solution to this common problem, let's review some crankcase ventilation history and PCV valve basics.

History

Internal combustion engines typically leak blow-by gases that cause internal crankcase pressure. These gases are the result of small amounts of combustion that leak past the piston rings and end up inside the crankcase. This pressure must be relieved or it will find its way out past gaskets or seals.

Before the early 1960s, combustion gases were vented directly to the atmosphere through a road draft tube. This tube was a pipe that extended from the crankcase to the bottom of the engine compartment. (See Figure 1, below.)

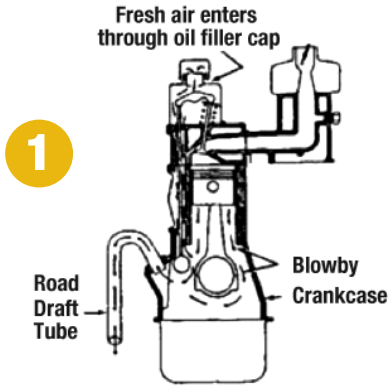

Although the road draft tube relieved pressure, it did not do a good job of removing moisture and harmful acidic vapors (it did not "positively" ventilate the crankcase). It was also found to be a significant source of smog due to the unburned hydrocarbons that were emitted to the atmosphere.

In the early 1960s, the PCV valve became the new accepted method of relieving crankcase pressure, while at the same time reducing emissions.

How A PCV Valve Works

Whereas a road-draft tube vented crankcase vapors to the atmosphere, a PCV valve functions differently. With a PCV valve gases are fed back into the intake manifold as part of a fresh charge of air and fuel. This is accomplished by drawing in a clean source of fresh air via a breather. On a V-8 the typical fresh air source is the opposite valve cover from the PCV valve. Other applications utilize a PCV valve mounted centrally in the intake manifold, above the lifter galley, with a fresh air intake equipped on one or both valve covers. Once inside the engine, the air circulates through the engine clearing away substantial amounts of moisture and harmful acidic blowby vapors. These vapors are drawn through the PCV valve and into the intake manifold where they are burned.

It is especially important for cars that are driven occasionally to have a properly functioning PCV system. With occasional use and or short trips a good PCV system will help rid an engine of moisture accumulated in the crankcase.

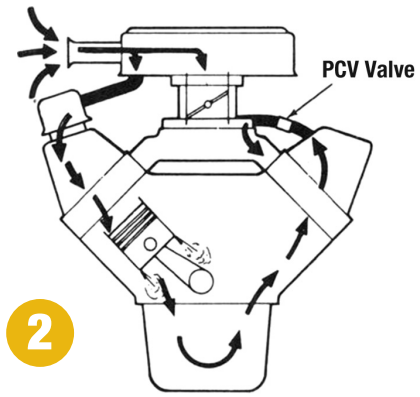

Typical PCV system configuration, PCV valve mounted on one valve cover with fresh air intake on opposite valve cover, shown above in Figure 2.

How a PCV Valve Varies Flow Rates

An engine's RPM and load dictate the generation of crankcase vapors. The PCV valve meters this flow. There are typically two flow rates; the first mode flows a small amount of vapor at idle when

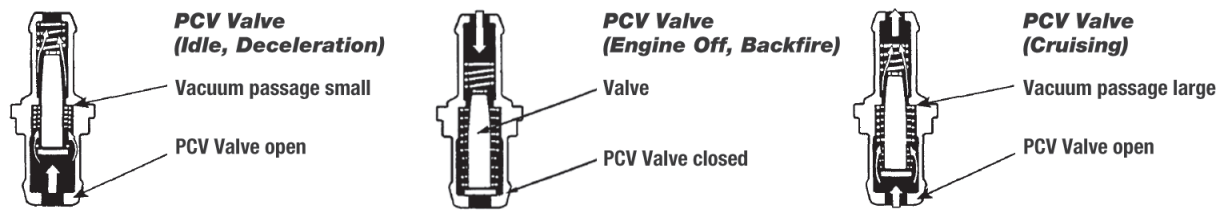

Figure 3: An engine's RPM and load dictate the generation of crankcase vapors; the PCV valve meters this flow.

vacuum is highest and the PCV is in idle mode. The second mode flows a larger amount when the engine is under a load (cruise mode) and the vacuum level has dropped. In a stock PCV valve this is accomplished by a single channel design utilizing a restrictor cone or ball and spring to control the restrictor's opening and closing. This design usually operates efficiently with the specific engine it was designed for.

In a high performance engine application, a stock valve may operate inefficiently or not at all. Since little flow data exists, picking the correct valve for a modified engine can be difficult or impossible. Our first instinct was to search for PCV flow data which could be cross referenced to part numbers or some type of engine recommendations. We quickly found this data was unavailable and information regarding PCV flow to the engine builder or consumer remained questionable at best.

After our quest to obtain flow data came up dry, we built our own flow bench specifically designed to analyze PCV valves. We returned to the wall of PCV valves that started our quest for knowledge, and purchased as many as we could get our hands on.

Many hours of flow testing and dozens of PCV valves later, we had established some bounds on the engineering requirements for a typical PCV system. We compared 4 cylinders to V8s, engines with aggressive cams to conservative grinds, and manufacturer to manufacturer. We established three main criteria for a PCV valve:

1. Idle flow rate
2. Cruise flow rate
3. Idle to cruise transition vacuum level

(continued)

How our valve is different

After thoroughly testing many stock and aftermarket valves, we came to the conclusion that the general construction was identical on nearly all of the valves available. Flow rates and vacuum transition points changed, some had 90 degree elbows, some were sized for different vacuum lines, but the internal operation was the same as it has been since the early '60s.

Stock PCV valves have one airflow path through the valve. An internal pintle is biased by a spring, which controls the flow rate based on vacuum level. Orifice sizes inside the valve dictate the flow under various modes of operation. This design is cost effective and extremely reliable, however it does not offer any adjustment to the end user.

We wanted to develop a valve that would be adjustable by the end user, a valve that could be delivered with recommended flow rates based on scientific testing. We wanted our valve to put the user in control, and to enable the

4

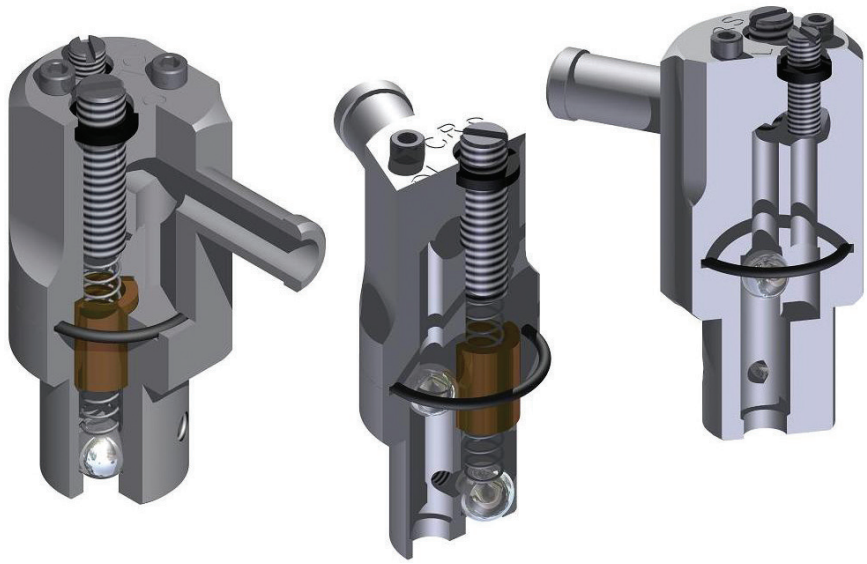

Figure 4: Cutaways show DF-17 Dual Flow Technology

user to make incremental adjustments to see what worked best for their engine.

After a few years of concepts, prototypes and testing, we came up with our DUAL FLOW two circuit design; a valve that would have an adjustable idle flow circuit and an adjustment for transition to the cruise circuit (Figure 4 on page 38).

We would use balls instead of a pintle for better backfire protection. The balls would also provide better reverse flow protection for boost applications (Figure 5).

In addition, we wanted our design to be easily rebuildable (Figure 6).

It is adaptable to inline applications (Figure 7) and able to be used in fixed orifice mode for low vacuum or unsteady vacuum situations (Figure 8).

Also usable with oil/air separators (Figure 9).

To provide a quality product, each valve would be flow tested to meet our specific flow parameters.

Figure 5: Stock valve alongside DF-17 Dual Flow PCV Valve

Figure 6: DF-17 Dual Flow PCV Valve with components

Validating the Effectiveness of Dual Flow Technology

On car data acquisition

With the finished prototype fully functional, we aimed to take testing to the next level. The DF-17 could match nearly any off the shelf PCV's flow on the bench, and could also be extended to flow beyond the limits of flow rates available off the shelf. But just how much flow does an engine need? How does flow on the flow bench translate to crankcase ventilation under real world conditions?

We considered testing on an engine dyno, but after careful consideration elected to change this course of action. Most street engines spend very little time at full throttle; even with aggressive driving the vast majority of time is spent at idle, off idle and light throttle cruising conditions. We wanted to capture the dynamics of real world driving of a street performance engine, such as sitting at a light, stop and go traffic, idling, highway cruising and the occasional full throttle jaunt.

We developed a data acquisition system which was portable and laptop based, which would allow outfitting the car with various sensors to monitor the valve's performance. We elected to use crankcase pressure as a metric for evaluating the PCV system's performance. Measurement with sensitive instrumentation confirmed what we already knew; if the PCV system is working properly, a slight vacuum should be present in the crankcase. This is not vacuum to the level of that which would be observed with a crankcase vacuum pump, however if the PCV valve is properly ventilating the crankcase, fresh air should be pulled in through the crankcase inlet breather or hose. To trigger this flow, a pressure differential must be present from the outside atmosphere to the inside of the crankcase. If the PCV system is not functioning properly, the crankcase will push vapors out of the crankcase inlet vent or hose. In this condition, the crankcase will be under positive pressure.

We decided to base the performance of the valve on the percentage of drive time the crankcase was under vacuum vs. the percentage of the drive time the crankcase was under pressure. We tested several stock valves, an aftermarket offering as well as running crankcase breathers only. Finally we tested our DF-17 valve with an optimized adjustment.

The results were impressive and dispelled some myth and urban legend regarding breathers only and randomly picked PCV valves.

(continued)

Figure 7: DF-17 Dual Flow PCV Valve with Inline Adaptor installed

Figure 8: Removing spring to run in fixed orifice mode. Adjustability and backfire protection are maintained in fixed orifice mode.

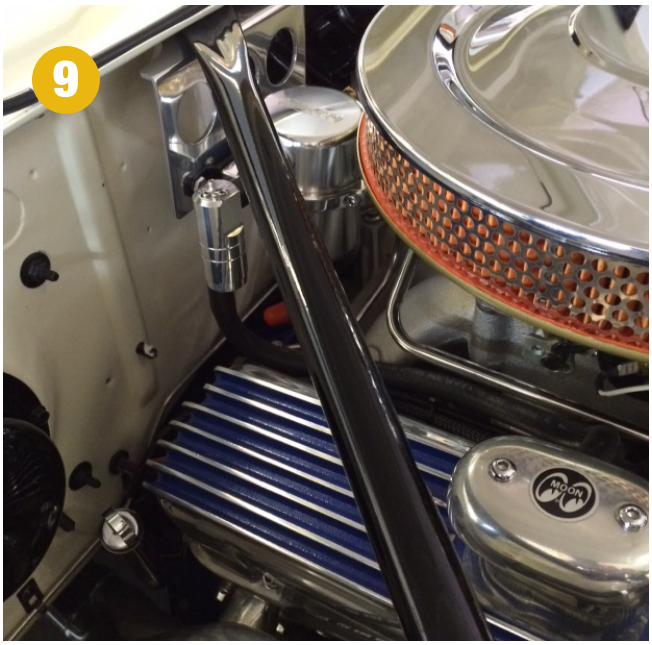

Figure 9: DF-17 Dual Flow PCV Valve with Inline adaptor installed used in conjunction with oil air separator

High Performance PCV Valve Shootout Flow Test Results

The results are in! M/E Wagner recently developed a data acquisition system that logs realtime high precision pressure measurements, enabling us to do a side by side comparison of several PCV valves. The data confirms what we already knew – not all PCV valves are created equal. (Figure 10)

All data was logged with a laptop during actual on-highway driving. Driving conditions were varied from light, moderate to heavy throttle identically for each test. The test route was a 17 mile round trip consisting of uphill, downhill and flat sections of road. The same test was performed twice for each valve, and the results averaged. Each valve showed excellent consistency from Test 1 to Test 2, validating the accuracy of the testing method. Full testing details can be seen in Figures 11, 12 and 13.

TESTING RESULTS – SUMMARY

The most basic metric of evaluating a PCV valve's performance is how effectively it evacuates the crankcase of blowby under a variety of driving conditions. When a PCV valve flows the proper amount of air, it will evacuate blowby from the crankcase and draw fresh air into the crankcase through the valve cover breather. During this condition, a slight vacuum is present in the crankcase. This slight vacuum is also helpful in preventing oil leaks.

When the engine produces more blowby than the PCV valve can handle, the blowby gasses find their way out through the valve cover breather. In this condition, the crankcase is under a slight amount of pressure, and no fresh air is drawn into the crankcase. This pressure is detrimental for oil leaks, but also indicates a more serious problem is present, the crankcase is not being properly evacuated. The acids and moisture present in the blowby are not being cleaned from your crankcase under this condition.

Our data acquisition system logged crankcase pressure vs. engine vacuum while driving using high precision pressure transducers. The table in Figure 11 shows an average of how often the crankcase was under pressure (not effectively ventilated) vs. under vacuum (properly ventilated). As expected,

10

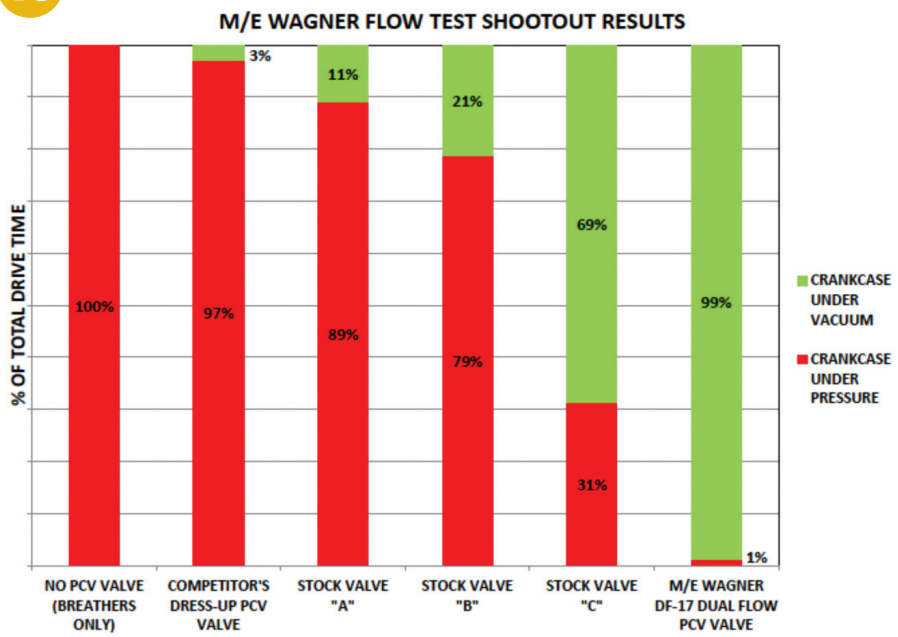

Figure 10: Flow Test Shootout Results

11

	PERCENTAGE OF TOTAL DRIVE TIME, AVERAGE	
	CRANKCASE UNDER PRESSURE	CRANKCASE UNDER VACUUM
NO PCV VALVE (BREATHERS ONLY)	100%	0%
COMPETITOR'S DRESS-UP PCV VALVE	97%	3%
STOCK VALVE "A"	89%	11%
STOCK VALVE "B"	79%	21%
STOCK VALVE "C"	31%	69%
M/E WAGNER DF-17 DUAL FLOW PCV VALVE	1%	99%

Figure 11: Test Results Summary

12

	AREA UNDER PRESSURE / VACUUM CURVE FOR TOTAL DRIVE TIME	
	CRANKCASE UNDER PRESSURE	CRANKCASE UNDER VACUUM
NO PCV VALVE (BREATHERS ONLY)	662	0
COMPETITOR'S DRESS-UP PCV VALVE	552	1
STOCK VALVE "A"	366	12
STOCK VALVE "B"	192	42
STOCK VALVE "C"	50	228
M/E WAGNER DF-17 DUAL FLOW PCV VALVE	7	1227

Figure 12: Test Results Details

running only breathers yielded a crankcase that was under pressure 100% of the time. Selecting a dress-up valve or a stock valve not specifically intended for the vehicle yielded mixed results. The M/E Wagner Dual Flow PCV Valve far outperformed any other valve tested, since it was properly tuned to the specific vehicle. (The 1% of the time the Dual Flow valve left the crankcase under pressure was under full throttle conditions where manifold vacuum is zero, this limitation is inherent to any PCV system.)

We won't name names with the competitor's dress-up valve we tested, however we will mention that we have observed this particular valve on a number of cars at car shows. It isn't a coincidence that many of these vehicles had a pool of oil or a towel around the opposite valve cover breather to mop up the excess blowby being constantly forced out.

An interesting note is that all three stock valves tested had exactly the same physical outer dimensions! All valves were listed as compatible with one or more V8 applications from the manufacturer; we did not test with 4 or 6 cylinder only valves to make the results fair. As can be seen from the results, the flow performance can vary greatly depending on which stock valve you happen to pick, as well as which valve happens to be compatible with your engine's vacuum profile.

TESTING RESULTS – DETAILS

The chart in Figure 12 shows the average over both tests for the integral (or area) under the pressure vs. time curve. The curve was split into areas that were above zero and below zero and integrated separately, so the pressure integrals did not cancel out the vacuum integrals.

This information can be used to determine to what degree the crankcase was under pressure or vacuum. For example, a valve that kept the crankcase under a low amount of pressure would have a low pressure integral (undesirable). A valve that kept the crankcase under a high amount of pressure would have a high pressure integral (even more undesirable). A valve that only moderately kept the crankcase under vacuum would have a low vacuum integral. A valve that kept the crankcase well under vacuum would have a higher vacuum integral (desirable, indicates proper ventilation).

The "under pressure" integral is proportional to how much blowby was forced out of the breather during the drive cycle, while the "under vacuum" integral is proportional to how much fresh air was drawn through the crankcase during the drive cycle.

The chart in Figure 13 (on page 44) shows full details of the testing data. This data was used to generate the averages displayed in the color coded graphs above. It can be observed from this data that over multiple tests, the same valve produced very similar results from test to test. This validates the consistency of the testing methods.

(continued)

13

	PERCENTAGE OF TOTAL DRIVE TIME		AREA UNDER PRESSURE / VACUUM CURVE FOR TOTAL DRIVE TIME	
	CRANKCASE UNDER PRESSURE	CRANKCASE UNDER VACUUM	CRANKCASE UNDER PRESSURE	CRANKCASE UNDER VACUUM
NO PCV VALVE (BREATHERS ONLY) TEST 1	100%	0%	663	0
NO PCV VALVE (BREATHERS ONLY) TEST 2	100%	0%	662	0
COMPETITOR'S DRESS-UP PCV VALVE TEST 1	98%	2%	567	1
COMPETITOR'S DRESS-UP PCV VALVE TEST 2	97%	3%	537	1
STOCK VALVE "A" TEST 1	89%	11%	363	11
STOCK VALVE "A" TEST 2	89%	11%	370	12
STOCK VALVE "B" TEST 1	80%	20%	208	46
STOCK VALVE "B" TEST 2	77%	23%	176	39
STOCK VALVE "C" TEST 1	31%	69%	52	243
STOCK VALVE "C" TEST 2	32%	68%	48	213
M/E WAGNER DF-17 DUAL FLOW PCV VALVE TEST 1	1%	99%	5	1235
M/E WAGNER DF-17 DUAL FLOW PCV VALVE TEST 2	1%	99%	9	1219

Figure 13: Full details of the testing data.

EXPERIMENTAL SETUP

TEST ROUTE
- 17 mile round trip drive for each "Test" listed
- Mix of uphill, downhill and flat roadway
- Testing was primarily highway driving, with a small amount of stop and go and idling
- Driving habits varied between light, partial and full throttle, with effort to maintain consistent driving style between all tests

TEST VEHICLE
- 1965 Ford Falcon Sedan Delivery
- 331 Stroked Small Block (stroked 302)
- 9.97:1 Compression Ratio
- 650 Edelbrock 4 Barrel Carburetor
- Crane custom grind hydraulic roller cam: .480"/.498" lift, .218/.220 duration @ .050, 106 LSA
- Edelbrock Performer 289 Intake
- Edelbrock Performer RPM Heads
- Exhaust – Hedman headers
- MSD Ignition
- 4 Speed T-10 Transmission
- 3.25 Gears

PCV VALVE TUNING
- Used standard M/E Wagner DF-17 PCV Valve without any modifications
- Tuned Dual Flow valve to flow specifications in manual for High Performance V8s.
- Utilizing "Standard" tuning mode, i.e. utilizing both the Idle and Cruise circuits
- Tuned vacuum transition level using a vacuum gauge

Summary of Benefits

Proper crankcase ventilation is the final piece of the puzzle in a custom engine build. It will ensure quality components and machine work will last longer. A properly functioning PCV valve will:

- Keep engine compartment cleaner by reducing oil leaks
- Tweak the last bit of drivability from an engine build
- Keep oil cleaner
- Rid the engine of harmful blowby gasses that can damage engine parts

In Conclusion

There is no need to look through the 50 or more PCV valves on the shelf at your local parts store and guess which one works for your application. With a DF-17 Dual Flow PCV valve one part number can provide proper crankcase ventilation for practically any 6 or 8 cylinder application. Furthermore, our PCV valve's vacuum tuning port together with your vacuum gauge will let you visually see that your PCV valve is functioning properly.

PLEASE NOTE: M/E Wagner DF-17 Dual Flow Adjustable PCV valves are for use on emissions exempt vehicles only.

M/E WAGNER PERFORMANCE

M/E Wagner was founded by the father and son team of Matt and Gene Wagner. Matt attended Penn State University for his Bachelor's degree in Mechanical Engineering and Georgia Tech for his Master's Degree in Mechanical Engineering. Gene attended Wilkes University for his Bachelor's Degree in Commerce and Finance, and has also taken Basic and Advanced High Performance Engine Blueprinting courses at Luzerne County Community College. For more information, please contact M/E Wagner Performance at 570-899-4544 or visit www.mewagner.com.